SAN o SUB
UNDER PRESSURE
CATALOGO GAS
MEDICALE
MADE IN ITALY

PRESSURE REDUCING VALVE 25E WITH SNAP ADJUSTMENT AND RESIDUAL SYSTEM

Series RO.165

Reducing valve with snap adjustment 0-15 lt/min for oxygen therapy use, balanced piston reducer included. With adjustable hose holder and residual system. Available with integrated AFNOR/UNI socket.

SAFETY DEVICES
Overpressure valve
(on request: Non-return valve on load connection)
Residual system (approx. 3 bar)
Protective cover (accessory)
Single unit test
Sintered filter

SERVICE LIFE
10 years from manufacture.
DOCUMENTATION
Declaration of Conformity and Instructions for Use.
TRACEABILITY
Serial number marked on the valve body.

REFERENCE LEGISLATIVE STANDARDS

TT0062	Directive
CE0123	Council Directive 93/42/EEC
Class	IIB
RDM	83922/R DM of the 20th of February 2007
CND	Z120309 DM of the 20th of February 2007

TECHNICAL STANDARDS OF REFERENCE
EN 10524-3:
TECHNICAL SPECIFICATIONS
PERFORMACE

Gas	Medical Oxygen
Inlet pressure	230 bar (on request 300 bar)
Outlet pressure	4 bar
• Flow rate	0-15 lt/min
Flow steps	1-1,5-2-3-4-6-9-12-15
• Flow rate	0-6 lit/min (a rich.)
Flow steps	0,5-1-1,5-2-2,5-3-4-5-6
Accuracy range	+-10% o +- 0,5 lt/min.
Operating temperature	-20° C +50

MATERIALS

Body	CW617N-UNI EN 12165 (Chrome plate brass)
Piston	Brass and P.A. 66

GAUGES

Full-scale	0-315 Bar
Diameter	40 mm
Fitting (flat on request)	1/8" G.C

CONNECTIONS

Inlet	25 E
Outlet	hose connector 6 mm
Filling fitting	UNI 11144/2 (med. oxygen)

DIMENSIONS AND WEIGHT

Dimension	100x125x80 mm.
Weight	1 kg

ACCESSORY DEVICES

Protective cover (Cap, Universal) compliant with drop test EN 10524-3

Ring for cylinders, capacity 1-2-3 liters.

Stretcher hook.

Filling adapters (not required if non-return valve is not installed).

UNI or AFNOR DIN low pressure socket. Seal cap.

Code	Description	Inlet	Connect.	Outlet	Flow Capacity	Gas
RO.165.12297UNI	GROUP 25E HOSE HOLDEDER 0-6 L/min	25E	UNI	PG	0-6 Lt	O2
RO.165.12295	GROUP 25E PORT. O-SOCKET UNI 0-15 L/min	25E	UNI	PG UJNI	0-15 Lt	O2
RO.165.12295UNI	GROUP 25E PORT. ORIENT UNI 0-15 L/min	25E	UNI	PG	0-15 Lt	O2
RO.165.12295AF	GROUP 25E PORT. O-SOCKET AFNOR 0-15 L/min	25E	UNI	AFNOR PG	0-15 Lt	O2
RO.165.12295NF	GROUP 25E PORT. ORIENT NF 0-15 L/min	25E	AFNOR	PG	0-15 Lt	O2
RO.165.12295DIN6	GROUP 25E PORT. ORIENT DIN6 0-15 L/min	25E	DIN6	PG	0-15 Lt	O2
RO.165.12296DIN	GROUP 25E P.OR. WITH P/AFNOR 0-30 L/min	25E	DIN	AFNOR PG	0-30 Lt	O2
RO.165.12296NF	GROUP 25E P.OR. WITH PRE NF 0-24 L/min	25E	AFNOR	AFNOR PG	0-24 Lt	O2
RO.165.12296UNI	GROUP 25E P.OR. WITH P/AFNOR 0-30 L/min	25E	UNI	AFNOR PG	0-30 Lt	O2
CO.100.10639	ADAPTER FOR FUTURA RES O2-CO2 UNI	UNI 2	-	-	-	O2 CO2
CO.100.10655	ADAPTER FOR RESIDUAL GROUPS O2 NF	NF B	-	-	-	O2
CO.100.18080	SEAL FOR GROUP HOSE HOLDER	-	-	-	-	-

PRESSURE REDUCING VALVE 17E WITH SNAP ADJUSTMENT AND RESIDUAL SYSTEM

Series RO.165

Reducing valve with snap adjustment 0-15 lt/min for oxygen therapy use, balanced piston reducer included. Adjustable hose holder and residual system. Available with integrated AFNOR/UNI socket.

SAFETY DEVICES
Overpressure valve
(on request: Non-return valve on load connection)
Protective cover (accessory)
Single unit test
Sintered filter
SERVICE LIFE
10 years from manufacture.
DOCUMENTATION
Declaration of Conformity and Instructions for Use.
TRACEABILITY
Serial number marked on the valve body.

REFERENCE LEGISLATIVE STANDARDS

π1370	Directive
CE_{0123}	Council Directive 93/42/EEC
Class	IIB
RDM	83922/R DM of the 20th of February 2007
CND	Z120309 DM of the 20th of February 2007

TECHNICAL STANDARDS OF REFERENCE
EN 10524-3:
TECHNICAL SPECIFICATIONS
PERFORMACE

Gas	Medical Oxygen
Inlet pressure	230 bar (on request 300 bar)
Outlet pressure	4 bar
• Flow rate	0-15 lt/min
Flow steps	1-1,5-2-3-4-6-9-12-15
• Flow rate	0-6 lit/min (a rich.)
Flow steps	0,5-1-1,5-2-2,5-3-4-5-6
Operating temperature	-20° C +50

MATERIALS

Body	CW617N-UNI EN 12165 (Chrome plate brass)
Piston	Brass and P.A. 66

GAUGES

Full-scale	0-315 Bar
Precision class	2.5
Diameter	40 mm
Fitting	1/8" G.C
(flat on request)	

CONNECTIONS

Inlet	17E
Outlet	hose connector 6 mm
Filling fitting	UNI 11144/2 (med. oxygen)

DIMENSIONS AND WEIGHT

Dimension	100x125x120 mm.
Weight	1,2 kg

ACCESSORY DEVICES
Protective cover (Cap, Universal)
Ring for cylinders capacity 1-2-3 lt. Hook for stretcher.
Filling adapters (not required if non-return valve is not installed).
UNI or AFNOR low pressure socket. Seal cap.

Code	Description	Inlet	Connection	Outlet	Flow capacity	Gas
RO.165.12294UNI	GROUP 17E PORT. ORIENT UNI 0-15 L/min	17E	UNI	PG	0-15Lt	O2
RO.165.12294NF	GROUP 17E PORT. ORIENT NF 0-15 L/min	17E	AFNOR	PG	0-15Lt	O2
RO.165.12294DIN	GROUP 17E PORT. ORIENT DIN 0-15 L/min	17E	DIN	PG	0-15Lt	O2
RO.165.12294DIN6	GROUP 17E PORT. ORIENT DIN6 0-15 L/min	17E	DIN6	PG	0-15Lt	O2
RO.165.12298UNI	GROUP 17E PORT. ORIENT UNI 0-30 L/min	17E	UNI	AFNOR PG	0-15Lt	O2
RO.165.12298NF	GROUP 17E PORT. ORIENT UNI 0-30 L/min	17E	UNI	AFNOR PG	0-15Lt	O2
RO.165.12298AF	GROUP 17E PORT. ORIENT UNI 0-30 L/min	17E	AFNOR	AFNOR PG	0-30Lt	O2
RO.165.12293UNI	GROUP 17E PORT. ORIENT UNI 0-30 L/min	17E	UNI	PG	0-30Lt	O2
CO.100.10639	ADAPTER FOR FUTURA RES O2-CO2 UNI	UNI 2	-	-	0	O2 CO2
CO.100.18080	SEAL FOR GROUP HOSE HOLDER	-	-	-	0	-

PROTECTIVE COVERS FOR SNAP-ON REDUCING VALVE 25E

Series CO.100

Protective cover that protects the valve group, ensuring maximum safety during transport and in case of cylinder falls. For cylinders with a capacity of 0,5-14 lt, with ring.

TECHNICAL STANDARDS OF REFERENCE
EN ISO 11117

TECHNICAL SPECIFICATIONS
Body material Nylon

CONNECTIONS
Connection to the cylinder via 5 stainless steel screws

ADAPTABILITY
To all cylinders with a capacity of 0.5 -14 liters

VERSIONS
Universal black cap cover. Customizable color and label.

SAFETY
Drop Test: EN ISO 11117
Fire resistance class: V2

ACCESSORY DEVICES
Stretcher hook
ABS ring

Code	Description
CO.100.18065NEW	COVER FOR GROUP NEW BLACK
2107A	CYLINDER RING NUT Ø TO SIZE FOR COP. TULIP

PROTECTIVE COVER FOR SNAP-ON REDUCING VALVE 17E

Series CO.100.18120 – 18121

Series CO.100.18125- 18126

Protective cover that protects the valve group, ensuring maximum safety during transport and in case of cylinder falls.

This cover is for cylinders with a capacity of 0,5 -7 lt and it can be with or without collar.

TECHNICAL REFERENCE STANDARDS

EN ISO 11117

TECHNICAL FEATURES

MATERIALS

Body	Nylon

CONNECTION

To the cylinder	through 5 stainless steel screws

DIMENSIONS and WEIGHT

Dimension	Ø 118 mm
Height	150 mm

ADAPTABILITY

For all cylinders with capacity between 0,5 – 14.

VERSIONS

White or black goblet cover.

Customizable color and label.

SAFETY

Drop Test: EN ISO 11117

Fire resistance class: V2

ACCESSORY DEVICES

Stretcher hook

ABS ring

Code	Description
CO.100.18120	CAP COVER d 140 SNAP-ON BLACK
CO.100.18121	CAP COVER d 140 SNAP-ON WHITE
CO.100.18125	CAP COVER. D.118 SNAP-ON WHITE
CO.100.18126	CAP COVER. D.118 SNAP-ON BLACK
CO.100.18130	STRETCHER HOOK SNAP-ON GROUP COVER
CO.100.10639	ADAPTER FOR FUTURA RES O2-CO2 UNI
CO.100.18080	SEAL FOR GROUP HOSE HOLDER

Code	Description	Inlet
CO.400.18021	OXYGEN THERAPY MASK WITH TUBE	PG

MEDICAL GAS CYLINDERS O2 THERAPY COMPLETE WITH SNAP REDUCER VALVE, COVER, MASK AND CASE

Series BO.100

ù

Cylinders for domestic, hospital and emergency room oxygen therapy use. They are supplied including a snap-on reduction valve, mask and suitable protective covers.

REFERENCE LEGISLATIVE STANDARDS
TT Directive
T- PED Directive
D.M. transport 03/01/1990
(stainless steel discs for medical use)

TECHNICAL STANDARDS OF REFERENCE
Council Directive 84/525/CEE

TECHNICAL FEATURES
PERFORMANCE

Gas	Medical Oxygen
Test operating pressure	200/300 bar

MATERIALS

Body	Steel 35 CrMo4 (UNI 7845)

CAPACITY

Liters	1 – 7

CONNECTIONS

Outlet	17 E / 25 E

ACCESSORIES
Stainless steel discs for medical use
Reducer valve with snap adjustment protective cap cover

OPTIONAL EXTRAS
Hard case (cylinders 5, 7 lt)
Transport bag (cylinders 1, 2, 3 lt)
High residual pressure valve mod. FUTURA - Pin Index high pressure valve

DOCUMENTATION
Declaration of Conformity and Instructions for Use

Code	Description	Inlet	Conn.	Outlet	Flow Capacity	Gas
BO.100.15011	CYLINDER O2 TERAP. 1L COMPLETE	17E	UNI2	HC	0-15Lt	O2
BO.100.15012	CYLINDER O2 TERAP. 2L COMPLETE	17E	UNI2	HC	0-15Lt	O2
BO.100.15013	CYLINDER O2 TERAP. 3L COMPLETE	17E	UNI2	HC	0-15Lt	O2
BO.100.15015	CYLINDER O2 TERAP. 5L COMPLETE	25E	UNI2	HC	0-15Lt	O2
BO.100.15017	CYLINDER O2 TERAP. 7L COMPLETE	25E	UNI2	HC	0-15Lt	O2
BO.100.15012NF	CYLINDER O2 TERAP. 2L ATT. NF COMPLETE	17E	NF	HC	0-15Lt	O2
BO.100.15013NF	CYLINDER O2 TERAP. 3L ATT. NF COMPLETE	17E	NF	HC	0-15Lt	O2
BO.100.15015NF	CYLINDER O2 TERAP. 5L ATT. NF COMPLETE	25E	NF	HC	0-15Lt	O2
CO.100.10639	ADAPTER FOR FUTURA RES O2-CO2 UNI	UNI 2	-	-	-	O2 CO2
CO.100.10655	ADAPTER FOR RESIDUAL GROUPS O2 NF	NF B	-	-	-	O2
CO.100.18080	SEAL FOR GROUP HOSE HOLDER	-	-	-	-	-

MEDICAL GAS CYLINDERS WITH SNAP ADJUSTMENT REDUCING VALVE AND PROTECTION CAP

Series BO.100

REFERENCE LEGISLATIVE STANDARDS
TT
T-PED
D.M transport 03/01/1990
(Stainless steel disks for medical)
RDM Available for every version

TECHINCAL STANDARDS OF REFERENCE
Council Directive 84/525/CEE

TECHNICAL FEATURES
PERFORMANCE

Gas	Medical oxygen
Test operating pressure	200/300 bar

MATERIALS

Body	Steel 35 CrMo4 (UNI 7845)

CAPACITY

Liters	0,5 – 14

CONNECTIONS

Outlet	17 E / 25 E

ACCESSORIES
Stainless steel disks for medical use
Reducer valve with snap adjustment protective cap cover

OPTIONAL EXTRAS
Hard case (cylinders 5, 7 lt)
Transport case (cylinders 1, 2, 3 lt)
Protective goblet cover
Plug

DOCUMENTATION
Declaration of Conformity and instructions for Use

Cylinders for domestic, hospital and emergency room oxygen therapy use. They are supplied with a snap-on reduction valve and suitable protection covers.

Code	Description	Inlet	Outlet	Gas	Flow capacity
BO.110.15026	O2 THERAP CYLINDER 0.5L C/GROUP C/COP	17E	HC	O2	0-15L/min
BO.110.15026NF	O2 THERAP CYLINDER 0.5L C/GROUP AFNOR C/COP	17E	HC	O2	0-15L/min
BO.110.15021	CYLINDER O2 THERAP 1L C/GROUP C/COP	17E	HC	O2	0-15L/min
BO.110.15021NF	CYLINDER O2 THERAP 1L C/GROUP AFNOR C/COP	17E	HC	O2	0-15L/min
BO.110.15022	O2 THERAP 2L CYLINDER C/GROUP C/COP	17E	HC	O2	0-15L/min
BO.110.15022NF	O2 NF THERAP 2L CYLINDER C/GROUP C/COP	17E	HC	O2	0-15L/min
BO.110.15023	O2 THERAP 3L CYLINDER C/GROUP C/COP	17E	HC	O2	0-15L/min
BO.110.15023NF	O2 NF THERAP 3L CYLINDER C/GROUP C/COP	17E	HC	O2	0-15L/min
BO.110.15025	CYLINDER O2 THERAP 5L C/GROUP C/COP	25E	HC	O2	0-15L/min
BO.110.15025NF	CYLINDER O2 THERAP 5L C/GR AFNOR C/COP.	25E	HC	O2	0-15L/min
BO.110.15027	CYLINDER O2 THERAP 7L C/GROUP C/COP	25E	HC	O2	0-15L/min
BO.110.15027NF	O2 THERAP 7L CYLINDER C/AFNOR GROUP C/COP	25E	HC	O2	0-15L/min
BO.110.15020	CYLINDER O2 THERAP 14L C/GROUP C/COP	25E	HC	O2	0-15L/min
BO.110.15020NF	CYLINDER O2 THERAP 14L C/GROUP AFNOR C/COP	25E	HC	O2	0-15L/min

Code	Description	Inlet
CO.400.18021	OXYGEN THERAPY MASK WITH TUBE	HC

MEDICAL GAS CYLINDERS WITH ABS VALVE AND PROTECTIVE CAP

Series BO.100

Cylinders for domestic, hospital and emergency room oxygen therapy use. They are supplied including a snap-on reduction valve and suitable protection covers

REFERENCE LEGISLATIVE STANDARDS
TT
T-PED
D.M trasports 03/01/1990
(Stainless steel disks for medical)

TECHINCAL STANDARDS OF REFERENCE
Council Directive 84/525/CEE

TECHNICAL FEATURES
PERFORMANCE

Gas	Medical oxygen
Test operating pressure	200/300 bar

MATERIALS

Body	Steel 35 CrMo4 (UNI 7845)

CAPACITY

Litres	0,5 – 50

CONNECTIONS

Outlet	17 E / 25 E

ACCESSORIES
Stainless steel disks for medical use

OPTIONAL EXTRAS
Hard case (cylinders 5, 7 lt)
Transport bag (cylinders 1, 2, 3 lt)
High residual pressure valve mod. FUTURA - Pin Index high pressure valve
Goblet protective cover
Universal protection cover

DOCUMENTATION
Declaration of conformity and instructions for use

Code	Description	Outlet	Gas
BO.100.15029	CYLINDER O2 1A1O 0.5L C/VALV UNI	UNI/2	O2
BO.100.15031	CYLINDER O2 1A1O 1L C/VALV UNI	UNI/2	O2
BO.100.15032	CYLINDER O2 1A1O 2L C/VALV UNI	UNI/2	O2
BO.100.15033	CYLINDER O2 1A1O 3L C/VALV UNI	UNI/2	O2
BO.100.15035	CYLINDER O2 1A1O 5L C/VALV UNI	UNI/2	O2
BO.100.15037	CYLINDER O2 1A1O 7L C/VALV UNI	UNI/2	O2
BO.100.15038	CYLINDER O2 1A1O 10L C/VALV UNI	UNI/2	O2
BO.100.15039	CYLINDER O2 1A1O 14L C/VALV UNI	UNI/2	O2
BO.100.15040	CYLINDER O2 1A1O 20L C/VALV UNI	UNI/2	O2
BO.100.15041	CYLINDER O2 1A1O 40L C/VALV UNI	UNI/2	O2

Da abbinare con RO.200 RO.300

ACCESSORIES FOR CYLINDERS

hard CASE FOR TRANSPORTING CYLINDERS

Code	Description
CO.100.18041	CYLINDER CASE L.5
CO.100.18042	CYLINDER CASE L.7

SOFT CASE FOR TRANSPORTING CYLINDERS

Code	Description
CO.100.18040	CYLINDER CASE L.1-2-
CO.100.18043	CYLINDER CASE L.3 length 65 cm

STAINLESS STEEL DISKS FOR MEDICAL USE

Code	Description
2105	CONICAL STAINLESS STEEL DISK FOR MED.
2106	STAINLESS STEEL FLAT DISK FOR MED.
2106F	STAINLESS STEEL FLAT DISK with hole FOR MED.
2106FP	STAINLESS STEEL FLAT DISK hole/med VAT Number
2106P	STAINLESS STEEL FLAT DISK FOR MED VAT Number

SEAL CAP FOR DOSING VALVE GROUP

Code	Description
CO.100.18080	SEAL FOR GROUP HOSE HOLDER

REDUCER FOR OXYGEN THERAPY WITH HOSE OUTLET

WITH PRE-CALIBRATED FLOW TO 6L

Series RO.200

UNI SHORT SIDE CONNECTION

Extremely compact pressure reducer with balanced piston with fixed flow rate of **6 l/min.**

LATERAL CONNECTION

Connection DIN **AFNOR** **PIN INDEX**

REFERENCE LEGISLATIVE STANDARDS

CE0123	Council Directive 93/42/EEC
Class	IIB
RDM	84047/R DM 20th of February 2007
CND	Z120309 DM 20th of February 2007

TECHNICAL STANDARDS OF REFERENCE

UNI EN 10524-1

TECHNICAL FEATURES

PERFORMANCE

Gas	Medical Oxygen
Inlet pressure	230 bar
Flow	6 L min
Operating temperature	-20° C +50°C

MATERIALS

Body	Chrome-plated brass
Reducing piston	Brass and P.A.6.6

GAUGE

Full scale	0-315 Bar
Accuracy class	2.5
Diameter	40 mm.
Fitting	1/8” G.C

CONNECTIONS

Outlet	Hose outlet 6 mm.
Inlet	UNI 11144/2, AFNOR, DIN, PIN INDEX, BS, CGA H12X1

DIMENSION AND WEIGHT

Dimension	125 x 100 mm.
Weight	0,560 kg

SAFETY DEVICES

Overpressure valve
Single unit test
Sinter filter

TRACEABILITY

Serial number stamped on the valve body

LIFETIME OF THE PRODUCT

10 years from product manufacturing

DOCUMENTATION

Declaration of conformity and Instructions for Use

Code	Description	Inlet	Outlet	Gas	Flow capacity
RO.200.12246UNI	SECOR O2 UNI REDUCER 0-6 L/min	UNI 2	HC	O2	0-6 Lt/min
RO.200.12246NF	SECOR O2 NF REDUCER 0-6 L/min	NF B	HC	O2	0-6 Lt/min
RO.200.12246DIN	SECOR O2 DIN REDUCER 0-6 L/min	DIN	HC	O2	0-6 Lt/min
RO.200.12246PIN	SECOR O2 PIN-INDEX REDUCER 0-6 L/min	PIN INDEX	HC	O2	0-6 Lt/min
RO.200.12246BS	REDUCER SECOR O2 BS 0-6 L/min	BS 3	HC	O2	6 Lt/min
RO.200.12246CGA	SECOR O2 CGA REDUCER 0-6 L/min	CGA	HC	O2	0-6 Lt/min
RO.200.12246H12X1	SECOR O2 12X1 0-6 L/min REDUCER	H12X1	HC	O2	0-6 Lt/min

PRECALIBRATED OXYGEN THERAPY REDUCER WITH 4 BAR HOSE CONNECTION

Series RO.200

LATERAL CONNECTION

IN-LINE CONNECTION

Extremely compact piston pressure reducer with fixed calibration, suitable for powering ambulance systems or medical equipment.

DIN connection 95MM

AFNOR Connection

REFERENCE LEGISLATIVE STANDARDS

CE0123	Council Directive 93/42/EEC
Class	IIB
RDM	84047/R DM 20th of February 2007
CND	Z120309 DM 20th of February 2007

TECHNICAL STANDARDS OF REFERENCE

UNI EN 10524-1

TECHNICAL FEATURES

PERFORMANCE

Gas	Medical Oxygen
Inlet pressure	230 bar
Outlet pressure	Precalibrated max 4 bar
Operating temperature	-20° C +50°C
Flow	70 lt/min

MATERIALS

Body	Chrome-plated brass
Reducing piston	Brass and P.A.6.6

GAUGE

Full scale	0-315 Bar
Accuracy class	2.5
Diameter	40 mm.
Fitting	1/8” G.C

CONNECTIONS

Outlet connection	Hose outlet 6 mm.
Inlet connection	UNI 11144/2

DIMENSION

Dimension	125 x 100 mm.
Weight	0,560 kg

SAFETY DEVICES

Overpressure valve
Single unit test
Sinter filter

TRACEABILITY

Serial number stamped on the valve body

LIFETIME OF THE PRODUCT

10 years from product manufacturing

DOCUMENTATION

Declaration of Conformity and Instructions for Use

lAteral connection

Code	Description	Inlet	Outlet	Gas	Max outlet pressure
RO.200.12241UNI	SECOR O2 UNI PG REDUCER	UNI	PG	O2	4,0
RO.200.12241NF	SECOR O2 NF PG REDUCER	NF B	PG	O2	4,0
RO.200.12241DIN	SECOR O2 DIN PG REDUCER	DIN	PG	O2	4,0
RO.200.12241DIN6	SECOR O2 DIN6 PG REDUCER	DIN6	PG	O2	4,0
RO.200.12241PIN	SECOR O2 PIN INDEX PG REDUCER	PIN	PG	O2	4,0

in-line connection

Code	Description	Inlet	Outlet	Gas	Max outlet pressure
RO.200.12242UNI	SECOR O2 UNI PG REDUCER	UNI	PG	O2	4,0
RO.200.12242BS	SECOR O2 BS PG REDUCER	BS 3	PG	O2	4
RO.200.12242DIN	SECOR O2 DIN PG REDUCER	DIN	PG	O2	4
RO.200.12242DIN6	SECOR O2 DIN6 PG REDUCER	DIN6	PG	O2	4
RO.200.12242NF	SECOR O2 NF PG REDUCER	NF B	PG	O2	4,0
RO.200.12242PIN	SECOR O2 PIN INDEX PG REDUCER	PIN INDEX	PG	O2	4

PRECALIBRATED OXYGEN THERAPY REDUCER WITH 4 BAR AFNOR CONNECTION

Series RO.202

SIDE CONNECTION

IN -LINE CONNECTION

OUTLET AFNOR SOCKET

Extremely compact and balanced piston pressure reducer with fixed calibration, suitable for powering ambulance systems or medical equipment.

PIN CONNECTION OUTLET AFNOR

DIN Connection

AFNOR Connection

REFERENCE LEGISLATIVE STANDARDS

CE0123	Council Directive 93/42/EEC
Class	IIB
RDM	84047/R DM 20th of February 2007
CND	Z120309 DM 20th of February 2007

TECHNICAL STANDARDS OF REFERENCE

UNI EN 10524-1

TECHNICAL FEATURES

PERFORMANCE	
Gas	Medical Oxygen
Inlet pressure	230 bar
Outlet pressure	Precalibrated max 4 bar
Operating temperature	-20° C +50°C
Flow	70 lt/min
MATERIALS	
Body	Chrome-plated brass
Reducing piston	Brass and P.A.6.6
GAUGE	
Full scale	0-315 Bar
Accuracy class	2.5
Diameter	40 mm.
Fitting	1/8” G.C
CONNECTIONS	
Outlet connection	Hose outlet 6 mm.
Inlet connection	UNI 11144/2
DIMENSION	
Dimension	125 x 100 mm.
Weight	0,560 kg

SAFETY DEVICES

Overpressure valve
Single unit test
Sinter filter

TRACEABILITY

Serial number stamped on the valve body

LIFETIME OF THE PRODUCT

10 years from product manufacturing

DOCUMENTATION

Declaration of Conformity and Instructions for Use.

LATERAL connection

Code	Description	Inlet	Outlet	Gas
RO.202.12241UNI	SECOR O2 + AFNOR REDUCER 4 BAR	UNI	AFNOR	O2
RO.202.12241NF	SECOR O2 + AFNOR REDUCER 4 BAR	NF B	AFNOR	O2
RO.202.12241DIN	SECOR O2 + AFNOR REDUCER 4 BAR	DIN	AFNOR	O2
RO.202.12241DIN6	SECOR O2 + AFNOR REDUCER 4 BAR	DIN6	AFNOR	O2

in-line connection

Code	Description	Inlet	Outlet	Gas
RO.202.12242BS	SECOR O2 BS PG REDUCER	BS 3	AFNOR	O2
RO.202.12242DIN	SECOR O2 DIN PG REDUCER	DIN	AFNOR	O2
RO.202.12242DIN6	SECOR O2 DIN6 PG REDUCER	DIN6	AFNOR	O2
RO.202.12242NF	SECOR O2 NF PG REDUCER	NF B	AFNOR	O2
RO.202.12242PIN	SECOR O2 PIN INDEX PG REDUCER	PIN INDEX	AFNOR	O2
RO.202.12242UNI	SECOR O2 UNI PG REDUCER	UNI	AFNOR	O2

REDUCER FOR MEDICAL GASES, BREATHING AIR, NITROUS OCIDE AND CARBON DIOXIDE

Series RO.200

OUTLET PG RO.200

OUTLET DIN PG RO.201

AFNOR CONNECTION RO.202

PIN INDEX INLET, DIN OUTLET RO203

Extremely compact pressure reducer with balanced piston and fixed calibration suitable for powering ambulance systems or medical equipment.

LEGISLATIVE STANDARDS OF REFERENCE

CE0123	Council Directive 93/42/EEC
Class	IIB
RDM	84047/R DM 20th of February 2007
CND	Z120309 DM 20th of February 2007

TECHNICAL STANDARDS OF REFERENCE

UNI EN 10524-1

TECHNICAL FEATURES

PERFORMANCE

Gases: Nitrogen, Breathing air, Nitrous oxide, Carbon dioxide

Inlet pressure	230 bar
Outlet pressure	Precalibrated max 4 bar
Operating temperature	-20° C +50°C
Flow	70 L min

MATERIALS

Body	Chrome-plated brass
Reducing piston	Brass and P.A.6.6

GAUGE

Full scale	0-315 Bar
Accuracy class	2.5
Diameter	40 mm.
Fitting	1/8” G.C

CONNECTIONS

Outlet connection	Hose outlet 6 mm.
Inlet connection	UNI 11144/2

DIMENSION and WEIGHT

Dimension	125 x 100 mm.
Weight	0,560 kg

SAFETY DEVICES

Overpressure valve, Single unit test, Sinter filter

TRACEABILITY

Serial number stamped on the valve body

LIFETIME OF THE PRODUCT

10 years from product manufacturing

DOCUMENTATION

Declaration of conformity and instructions for use.

LATERAL CONNECTION

Code	Description	Inlet	outlet	Gas
RO.200.12245DIN	SECOR AIR REDUCER MEDICAL DIN	DIN	PG	ARIA
RO.200.12245PIN	SECOR ARIA PIN INDEX REDUCER	PIN	PG	ARIA
RO.200.12245UNI	SECOR ARIA UNI REDUCER	UNI	PG	ARIA
RO.200.12245NF	SECOR ARIA UNI REDUCER	NF B	PG	ARIA
RO.200.12248DIN	SECOR CO2 MED DIN PG REDUCER	DIN	PG	CO2 MED
RO.200.12248PIN	SECOR CO2 MED PIN PG REDUCER	PIN	PG	CO2 MED
RO.200.12248UNI	SECOR CO2 MED UNI PG REDUCER	UNI	PG	CO2 MED
RO.200.12248NF	SECOR CO2 MED NF PG REDUCER	AFNOR	PG	CO2 MED
RO.200.12247DIN	SECOR N2O UNI REDUCER	DIN	PG	N2O
RO.200.12247PIN	SECOR N2O UNI REDUCER	PIN	PG	N2O
RO.200.12247UNI	SECOR N2O UNI REDUCER	UNI	PG	N2O
RO.200.12247NF	SECOR N2O UNI REDUCER	AFNOR G	PG	N2O

BALANCED PISTON REDUCER WITH FLOW METER 0-6L 0-15L

Series RO.200

Balanced piston pressure reducer with continuous flow regulation.

SAFETY DEVICES
Overpressure valve
Single unit test
Sinter filter
TRACEABILITY
Serial number stamped on the valve body
LIFETIME OF THE PRODUCT
10 years from product manufacturing
DOCUMENTATION
Declaration of Conformity and Instructions for Use.

REFERENCE LEGISLATIVE STANDARDS

CE0123	Council Directive 93/42/EEC
Class	IIB
RDM	84047/R DM 20th February 2007
CND	Z120309 DM 20th February 2007

TECHICAL STANDARDS OF REFERENCE
UNI EN 10524-1
TECHNICAL FEATURES
PERFORMANCE

Gas	Medical Oxygen
Inlet pressure	230 bar (upon request 300 bar)
Outlet pressure	4 bar
Flow rate	0-6 lit/min
Flow rate	0-15 lit/min
Precision	+-10% o +- 0,5 lt/min
Operating temperature	-20° C +50°C

MATERIALS

Body	Chrome-plated brass
Reducing piston	Brass and P.A.6.6
Column	Polyacrylic shock-proof

GAUGE

Full scale	0-315 Bar
Accuracy class	2.5
Diameter	50 mm.
Connection	1/8” G.C

CONNECTIONS

Outlet	9/16” with nut and hose holder 6 mm
Inlet	UNI 11144/2, BS, DIN, AFNOR, PIN UK, CGA,

DIMENSIONS AND WEIGHT

Dimension	170 x 100 x 110 mm.
Weight	1,0 kg

Code	Description	Inlet	outlet	low capacity	Gas
RO.200.12215	PIST REDUCER. C/FLUSS.0-15L/min 9/16UNF	UNI	PG	0-15Lt/min	O2
RO.200.12215BS	PIST REDUCER. C/FLUSS.0-15L/min 9/16 BS	BS 3	PG	0-15Lt/min	O2
RO.200.12215DIN	PIST REDUCER. C/FLUS.0-15L/min 9/16 DIN	DIN	PG	0-15Lt/min	O2
RO.200.12215NF	PIST REDUCER. C/FLU.0-15L/min 9/16 NF	NF B	PG	0-15Lt/min	O2
RO.200.12215UK	RIDUTTORE PIST.BS C/FLUSS.0-15 LT. M9/16*	UK	PG	0-15Lt/min	O2
RO.200.12215US	REDUCER P-C/FLUSS.0-15 LT. M 9/16 CGA**	CGA	PG	0-15Lt/min	O2
RO.200.12215PIN	Rid. PIST. C/FLU. PIN INDEX .0-15L/min 9/16	PIN	PG	0-15Lt/min	O2
RO.200.12215DOPPIO	PISTON REDUCER WITH DOUBLE FLUSS.	UNI	PG	0-15Lt/min	O2
RO.200.12213	PIST REDUCER. C/FLUSS. 0-6L/min 9/16UNF	UNI	PG	0-6 Lt/min	O2
RO.200.12213BS	PIST REDUCER. C/FLUSS. 0-6L/min 9/16UNF	BS 3	PG	0-6 Lt/min	O2
RO.200.12213DIN	PIST REDUCER. C/FLUSS. 0-6L/min 9/16UNF	DIN	PG	0-6 Lt/min	O2
RO.200.12214BS	PIST REDUCER. C/FLUSS.0-15L/min UMID.BS	BS 3	PG	0-15Lt/min	O2
RO.200.12214CGA	PIST REDUCER. C/FLU.0-15L/minUMIDIF.CGA	CGA	PG	0-15Lt/min	O2
RO.200.12214DIN	PIST REDUCER. C/FLU.0-15L/minUMIDIF.DIN	DIN	PG	0-15Lt/min	O2
RO.200.12214NF	REDUCER PIS. C/FLUSS.0-15L/minUMIDIF.NF	NF B	PG	0-15Lt/min	O2
RO.200.12214PIN	PIST REDUCER. PINIDEX C/FL 0-15 UMIDIF	PIN INDEX	PG	0-15Lt/min	O2
RO.200.12214UNI	PIST REDUCER. C/FLUSS. 0-15 UMIDIF UNI	UNI	PG	0-15Lt/min	O2

PRESSURE REDUCER WITH SNAP ADJUSTMENT AND ADJUSTABLE HOSE HOLDER

Series RO.300

Balanced piston pressure reducer with step adjustment for the delivery of the output flow. The hose holder can be rotated 360°, facilitating the insertion of the nasal cannula and/or mask.

Connection UNI AFNOR	12250 Lateral connection 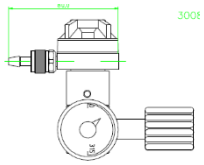
12239 12245 12240	12256 SINGLE USE CYLINDERS
12245VE Connection AFNOR with Venturi aspirator EPG	12245 DIN 12245NF

REFERENCE LEGISLATIVE STANDARDS

CE0123	Council Directive 93/42/EEC
Class	IIB
RDM	84047/R DM 20th of February 2007
CND	Z120309 DM 20th of February 2007

REFERENCE TECHNICAL STANDARDS

UNI EN 10524-1

TECHNICAL FEATURES

PERFORMANCE

Gas	Medical Oxygen
Inlet pressure	230 bar (a rich. 300 bar)
Outlet pressure	4 bar
• Flow rate	0-15 lt/min
Flow steps	1-1,5-2-3-4-6-9-12-15
• Flow rate	0-6 lit/min (a rich.)
Flow steps	0,5-1-1,5-2-2,5-3-4-5-6
Accuracy	+-10% o +- 0,5 lt.min.
Operating temperature	-20° C +50°C

MATERIALS

Body	CW617N-UNI EN 12165 Chrome-plated brass
Reducing piston	Brass and P.A.6.6

GAUGE

Full scale	0-315 Bar
Accuracy class	2.5
Diameter	50 mm.
Fitting	1/8" G.C

CONNECTIONS

Outlet	9/16" with nut and hose holder 6 mm.
Inlet connection	UNI 11144/2

DIMENSION AND WEIGHT

Dimension	140 x 40 x 90 mm.
Weight	0,69 kg.

SAFETY DEVICES

Overpressure valve, Single test, Sintered filter

TRACEABILITY

Serial number stamped on the valve body

LIFETIME OF THE PRODUCT

10 years from product manufacturing

DOCUMENTATION

Declaration of Conformity and instructions for use

Code	Description	Inlet	Outlet	Flow Capacity	Gas
RO.300.12239NF	DISPENSER O2 NF MINI AXIS 0-6L/min SCATTI	NF B	PG	0-6 Lt/min	O2
RO.300.12239UNI	DISPENSER O2 UNI MINI AXIS 0-6L/minSCALKS	UNI	PG	0-6 Lt/min	O2
RO.300.12240UNI	DISPENSER O2 UNI AXIS 0-15 L/min SCATTI	UNI	PG	0-15 Lt/min	O2
RO.302.12240UNI	DISPENSER O2 UNI 0-15 L/min C/AFNO SOCKET	UNI	AFNOR	0-15 Lt/min	O2
RO.302.12240DIN	DISPENSER O2 DIN9 0-15 L/min W/AFNO SOCKET	DIN9	AFNOR	0-15 Lt/min	O2
RO.300.12240NF	DISPENSER O2 NF AXIS 0-15 L/min SCATTI	NF B	PG	0-15 Lt/min	O2
RO.301.12240UNI	DISPENSER O2 UNI 0-15 L/min SOCKET UNI	UNI	UNI	0-15 Lt/min	O2
RO.300.12250DIN	MINI O2 DIN ATT DISPENSER. Lat.	DIN	PG	0-15 Lt/min	O2
RO.300.12250NF	DISPENSER MINI O2 NF ATT. Lat.	NF B	PG	0-15 Lt/min	O2
RO.300.12250UNI	DOSER MINI O2 UNI ATT. Lat.	UNI	PG	0-15 Lt/min	O2
RO.301.12250UNI	DISPENSER MINI O2 ATT. Lat. UNI SOCKET	UNI	UNI	0-15 Lt/min	O2
RO.302.12250NF	DISPENSER MINI O2 NF ATT. Lat. AFNOR SOCKET	NF B	AFNOR	0-15 Lt/min	O2
RO.300.12250PIN	MINI O2 PIN INDEX DISPENSER ATT. Lat.	PIN	PG	0-15 Lt/min	O2
RO.300.12250UNI	DOSER MINI O2 UNI ATT. Lat.	UNI	PG	0-15 Lt/min	O2
RO.300.12256	DISPENSER O2 MINI ATT.12X1,,5	12X1,5	PG	0-15 Lt/min	O2
RO.300.12256NF	DISPENSER O2 MINI ATT.12X1,,6	12X1,5	PG + AFNOR	0-15 Lt/min	O2
RO.300.12208	DISPENSER O2 UNI LT. MIN 0-30	UNI	PG	0-30Lt/min	O2
RO.300.12208NF	DISPENSER O2 NF LT. MIN 0-30	NF B	PG	0-30Lt/min	O2
RO.300.12245DIN	DISPENSER O2 DIN 10 AXIS 0-30 LT. Min	DIN	PG	0-30Lt/min	O2

FIRST STAGE PRESSURE REDUCER FOR MEDICAL EQUIPMENT, ADJUSTABLE OUTPUT PRESSURE 0-4BAR

Series RO.200

Single stage pressure reducer. It is used to power medical systems and equipment. It can be equipped with a outlet rubber hose or UNI/AFNOR/DIN/BS socket. The outlet pressure is adjustable.

SAFETY DEVICES
Over pressure safety valve
Single unit test
Sintered filter
Single integrated body
TRACEABILITY
Serial number stamped on the valve body
LIFETIME OF THE PRODUCT
10 years from product manufacturing
DOCUMENTATION
Declaration of Conformity and instructions for use

REFERENCE LEGISLATIVE STANDARDS

CE_{0123}	Council Directive 93/42/EEC
Class	IIB
RDM	84047/R DM 20th of February 2007
CND	Z120309 DM 20th of February 2007

REFERENCE TECHNICAL STANDARDS
UNI EN 10524-1
TECHNICAL FEATURES
PERFORMANCE

Gas	O^2, Air , N^2O, CO^2
Inlet pressure	230 bar (on request 300 bar)
Outlet pressure	adjustable 0-4 bar
Operating temperature	-20° C +50°C

MATERIALS

Body	CW617N-UNI EN 12165 Chrome-plated brass
Reducing piston	Brass and P.A.6.6

GAUGE

Full scale	0-315 Bar 0-16 bar (b p)
Accuracy class	2.5
Diameter	50 mm.
Fitting	1/8” G.C

CONNECTION

Outlet	Perpendicular to the inlet connection 9/16 and hose connector 6 mm.
Fitting	UNI AFNOR
Inlet connection	UNI 11144/2 (Medical oxygen) UNI 11144/6 (Medical air) UNI 11144/9 (Medical nitrous oxide) UNI 11144/10 (Medical carbon dioxide)

DIMENSION AND WEIGHT

Dimension	130 x 120 x 190 mm.
Weight	1,130 kg.

CODE	DESCRIPTION	INLET	OUTLET	GAS
RO.200.12081UNI	REDUCER 1° STADIO 2MAN. O2 UNI PG	UNI 2	PG	O2
RO.200.12081NF	REDUCER 1° STADIO 2MAN. O2 NF PG	NF B	PG	O2
RO.200.12081DIN	REDUCER 1° STADIO 2MAN. O2 DIN9 3/4 G /PG	DIN	PG	O2
RO.200.12081DIN6	REDUCER 1° STADIO 2MAN. O2 DIN6 21.8 PG	DIN6	PG	O2
RO.200.12082UNI	REDUCER 1° STADIO 2MAN. AIR UNI PG	UNI 6	PG	ARIA
RO.200.12082NF	REDUCER 1° STADIO 2MAN. AIR NF PG	NF B	PG	ARIA
RO.200.12082DIN	REDUCER 1° STADIO 2MAN. AIR DIN 5/8 PG	DIN	PG	ARIA
RO.200.12082DIN6	REDUCER 1° STADIO 2MAN. AIR DIN 6 21,8PG	DIN6	PG	ARIA
RO.200.12084	REDUCER 1° STADIO.2MAN. CO2MED PG	UNI 2	PG	CO2 MED
RO.200.12084MED	REDUCER 1° STADIO 2MAN. CO2 MED PG	UNI 10H	PG	CO2 MED
RO.200.12086	REDUCER 1° STADIO.2MAN. N2O PG	UNI9	PG	N2O
RO.200.12086UNI	REDUCER 1° STADIO 2MAN. N2O UNI PG	UNI9	PG	N2O
RO.200.12086NF	REDUCER 1° STADIO.2MAN. N2O NF PG	AFNOR G	PG	N2O
RO.202.12091	REDUCER 1 STD 2MAN. O2 + AFNOR	UNI 2	AFNOR	O2
RO.201.12101	REDUCER 1 STD 2MAN. O2 + UNI	UNI 2	UNI	O2
RO.201.12102	REDUCER 1 STD 2MAN. AIR + UNI INTAKE	UNI 6	UNI	ARIA
RO.201.12104	REDUCER 1 STD 2MAN. CO2 MED + UNI	UNI 10H	UNI	CO2 MED
RO.201.12106	REDUCER 1 STD 2MAN. N2O + UNI	UNI9	UNI	N2O

DOUBLE STAGE PRESSURE REDUCER FOR MEDICAL EQUIPMENT WITH ADJUSTABLE OUTPUT PRESSURE 0-4 BAR

Series RO.200

The double stage allows a finer and more constant regulation of the pressure, this reducer is used to power medical systems and equipment.
It can be equipped with a rubber port outlet or UNI/AFNOR socket and the outlet pressure is adjustable.

SAFETY DEVICES
Over pressure safety valve
Single unit tests
Sinter filter
Single integrated body
TRACEABILITY
Serial number stamped on the valve body
LIFETIME OF THE PRODUCT
10 years from product manufacturing
DOCUMENTATION
Declaration of Conformity and Instructions for use

REFERENCE LEGISLATIVE STANDARDS

CE_{0123}	Council Directive 93/42/EEC
Class	IIB
RDM	84047/R DM 20th of February 2007
CND	Z120309 DM 20th of February 2007

REFERENCE TECHNICAL STANDARDS
UNI EN 10524-1
TECNICAL FEATURES
PERFORMANCE

Gas	O^2, Air , N^2O, CO^2
Inlet pressure	230 bar (upon request 300 bar)
Outlet pressure	Adjustable. 0-5 bar
Operating temperature	-20° C +50°C

MATERIALS

Body	CW617N-UNI EN 12165 Chrome-plated brass
Reducing piston	Brass and P.A.6.6

GAUGE

Full scale	0-315 Bar 0-10 bar (low pressure)
Accuracy class	2.5
Diameter	50 mm.
Fitting	1/8" G.C

CONNECTIONS

Outlet	Perpendicular to the inlet connection 9/16 and hose connector 6 mm.
Socket	UNI AFNOR
Inlet connection	UNI 11144/2 (Medical oxygen)
	UNI 11144/6 (Medical air)
	UNI 11144/9 (Medical nitrous oxide)
	UNI 11144/10 (Medical carbon dioxide)

DIMENSIONS AND WEIGHT

Dimension	130 x 120 x 190 mm.
Weight	1,130 kg

Code	Description	Inlet	outlet	Gas
RO.200.12161DIN	REDUCER I1° STADIO 2MAN. O2 DIN PG	DIN	PG	O2
RO.200.12161NF	REDUCER I1° STADIO 2MAN. O2 NF PG MED CE	NF B	PG	O2
RO.200.12161UNI	REDUCER I1° STADIO 2MAN. O2 UNI PG MED CE	UNI 2	PG	O2
RO.200.12162UNI	REDUCER I1° STADIO 2MAN. AIR UNI PG MED	UNI 6	PG	ARIA
RO.200.12163UNI	REDUCER I1° STADIO 2MAN. CO2 UNI PG MED	UNI 2	PG	CO2
RO.200.12164MED	REDUCER I1° STADIO 2MAN. CO2 MED PG MED	CO2 MED	PG	CO2 MED
RO.200.12165UNI	REDUCER I1° STADIO 2MAN. N2 UNI PG MED	UNI 5	PG	N2
RO.200.12166UNI	REDUCER I1° STADIO 2MAN. N2O UNI PG MED	UNI9	PG	N2O
RO.200.12168PIN	RIDUTTORE 2 STD 2MAN. pin index	STAFFA P.I.	PG	-
RO.201.12161UNI	REDUCER 2 STD 2MAN. O2 SOCKET UNI CE	UNI 2	UNI	O2
RO.202.12161UNI	RIDUTTORE 2 STD 2MAN. O2UNI MED CE PRESA AFN	UNI 2	AFNOR	VARI
RO.201.12162UNI	RIDUTTORE 2 STD 2MAN. AIRUNI MED CE PRESA UNI	UNI 6	UNI	ARIA
RO.202.12162UNI	RIDUTTORE 2 STD 2MAN. AIRUNI MED CE PRESA AFN	UNI 6	AFNOR	VARI
RO.201.12164UNI	RIDUTTORE 2 STD 2MAN. CO2 UNI MED CE PRESA UNI	UNI 10H	UNI	CO2 MED
RO.202.12164MED	RIDUTTORE 2 STD 2MAN. CO2 MED CE PRESA AFNOR	UNI 10H	AFNOR	CO2 MED
RO.201.12166UNI	RIDUTTORE 2 STD 2MAN. N2O UNI MED PRESA UNI	UNI9	UNI	N2O
RO.202.12166UNI	RIDUTTORE 2 STD 2MAN. N2O UNI MED PRESA AFN	UNI9	AFNOR	VARI
RO.201.12168PIN	RIDUTTORE 2 STD 2MAN. O2 STAFFA P.I. PG	STAFFA	UNI	O2

DOUBLE STAGE PRESSURE REDUCER FOR MEDICAL EQUIPMENT, WITH PRE-CALIBRATED OUTLET PRESSURE 4 BAR

Series RO.200

It is used to power medical systems and equipment.
It can be equipped with a hose outlet connection or UNI/AFNOR socket and the outlet pressure is adjustable.

SAFETY DEVICES
Over pressure safety valve
Single unit tests
Sinter filter
Single integrated body

TRACEABILITY
Serial number stamped on the valve body

LIFETIME OF THE PRODUCT
10 years from product manufacturing

DOCUMENTATION
Declaration of Conformity and Instructions for Use

REFERENCE LEGISLATIVE STANDARDS

CE_{0123}	Council Directive 93/42/EEC
Class	IIB
RDM	84047/R DM 20th February 2007
CND	Z120309 DM 20th February 2007

REFERENCE TECHNICAL STANDARDS
UNI EN 10524-1

TECHNICAL FEATURES

PERFORMANCE

Gas	O^2, Aria , N^2O, CO^2
Inlet pressure	230 bar (upon request 300 bar)
Outlet pressure	Adjustable, 0-4 bar
Operating temperature	-20° C +50°C

MATERIALS

Body	CW617N-UNI EN 12165 Chrome-plated brass
Reducing piston	Brass and P.A.6.6

GAUGE

Full scale	0-315 Bar 0-10 bar (low pressure)
Accuracy class	2.5
Diameter	50 mm.
Fitting	1/8” G.C

CONNECTIONS

Outlet	Perpendicular to the inlet connection 9/16 and hose connector 6 mm.
Socket	UNI AFNOR
Inlet connection	UNI 11144/2 (Medical oxygen) UNI 11144/6 (Medical air) UNI 11144/9 (Medical nitrous oxide) UNI 11144/10 (Medical carbon dioxide)

DIMENSIONS AND WEIGHT

Dimension	130 x 120 x 190 mm.
Weight	1,130 kg

Code	Description	Inlet	Outlet	Gas
RO.200.12120MED	REDUCER I STAGE 1MAN. CO2 MED. Pg	UNI 2	HC	CO2
RO.200.12121CGA	REDUCER I STADIO 1MAN. O2 CGA PG	CGA	HC	O2
RO.200.12121DIN	REDUCER I STADIO 1MAN. O2 DIN PG	DIN	HC	O2
RO.200.12121DIN6	REDUCER I STADIO 1MAN. O2 DIN6 PG	DIN6	HC	O2
RO.200.12121NF	REDUCER I STADIO 1MAN. O2 NF PG	NF B	HC	O2
RO.200.12121PIN	REDUCER II STAGE MAN. O2 PIN INDEXC/PG-	PIN INDEX	HC	O2
RO.200.12121UNI	REDUCER I STAGE 1MAN. O2 UNI PG	UNI 2	HC	O2

.

DOUBLE STAGE PRESSURE REDUCER FOR OZONE THERAPY

Series RO.200

Double or single stage pressure reducers. They can be used to power medical systems and equipment for ozone therapy.
They can be equipped with a hose connection outlet or UNI/AFNOR socket. The outlet pressure is adjustable.

SAFETY DEVICES
Over pressure safety valve
Single unit tests
Sinter filter
Single integrated body

TRACEABILITY
Serial number stamped on the valve body

LIFETIME OF THE PRODUCT
10 years from product manufacturing

DOCUMENTATION
Declaration of Conformity and Instructions for Use

REFERENCE LEGISLATIVE STANDARDS

CE_{0123}	Council Directive 93/42/EEC
Class	IIB
RDM	84047/R DM 20th February 2007
CND	Z120309 DM 20th February 2007

REFERENCE TECHNICAL STANDARDS
UNI EN 10524-1

TECHNICAL FEATURES

PERFORMANCE

Gas	O^2,
Inlet pressure	200 bar
Outlet pressure	Adjustable. 0-5 bar
Operating temperature	-20° C +50°C

MATERIALS

Body	CW617N-UNI EN 12165 Chrome-plated brass
Reducing piston	Brass and P.A.6.6

GAUGE

Full scale	0-315 Bar 0-10 bar (low pressure)
Accuracy class	2.5
Diameter	50 mm.
Fitting	1/8” G.C

CONNECTIONS

Outlet	Perpendicular to the inlet connection 9/16 and hose connector 6 mm.
Socket	Hose connector
Inlet connection	UNI 11144/2 (Medical oxygen)

DIMENSIONS AND WEIGHT

Dimension	130 x 120 x 190 mm.
Weight	1,130 kg

Code	Description	Inlet	Max outlet pressure	Gas
RO.200.12187	REDUCER 2 STAGE PISTON 2 MAN. O2 0-2	UNI 2	0-2,5	O2
RO.300.12230	O2 DISPENSER pre-calibrated to 0.45bar	UNI 2	0,45 fixed	O2
RO.200.12081UNI	REDUCER 1° STAGE 2MAN. O2 UNI PG	UNI 2	0-4	O2

MEDICAL OXYGEN FLOWMETER WITH STEP ADJUSTMENT

Series RO.400

It is used to power medical systems and equipment. It can be equipped with a hose holder or UNI/AFNOR socket. The outlet pressure is adjustable.

SAFETY DEVICES
Over pressure safety valve
Single unit tests
Sinter filter
Single integrated body

TRACEABILITY
Serial number stamped on the valve body

LIFETIME OF THE PRODUCT
10 years from product manufacturing

DOCUMENTATION
Declaration of Conformity and Instructions for Use

REFERENCE LEGISLATIVE STANDARDS

CE_{0123}	Council Directive 93/42/EEC
Class	IIB
RDM	84047/R DM 20th of February 2007
CND	Z120309 DM 20th of February 2007

REFERENCE TECHNICAL STANDARDS
UNI EN 10524-1

TECHNICAL FEATURES
PERFORMANCE

Gas	Medical oxygen
Inlet pressure	3.5 bar
• Flow rate	0-15 lt/min
Flow steps	1-1,5-2-3-4-6-9-12-15
• Flow rate	0-6 lt/min (upon requesti)
Flow steps	0,5-1-1,5-2-2,5-3-4-5-6
Accuracy	+-10% o +- 0,5 lt.min.
Operating temperature	-20° C +50°C

MATERIALS

Body	Chromed-brass CW617N-UNI EN 12165
Piston	Brass and P.A.6.6

CONNECTIONS

Inlet	AFNOR/UNI

Outlet 9/16 UNF male (1/4" upon request) with nut and hose connector

DIMENSIONS AND WEIGHT

Dimension	170 x 100 x 110 mm.
Weight	0,780 kg.

Code	Description	Inlet	Outlet	Flow capacity	Gas
RO.400.12039UNI	JERKY FLOW METER 9/16" UNI COUPLING	UNI 2	HC	0/15Lt.min	O2
RO.400.12039	1/4G JERKY FLOW METER, without coupling	1/4G	HC	0/15Lt.min	O2
CO.400.12059	HUMIDIFIER 9/16UNF FOR FLOW METER	9/16 UNF	HC	0/15Lt m	O2
CO.400.18016	DISPOSABLE HUMIDIFIER 9/16" MU0002	9/16 F	HC	0/15Lt m	O2

MEDICAL OXYGEN FLOWMETER WITH GRAFT

Series RO.400

Medical oxygen flowmeter with continuous regulation for hospital systems. The adjustment after the passage from the column allows greater flow stability.

SAFETY DEVICES
Single unit tests
Sinter filter
Single integrated body

TRACEABILITY
Serial number stamped on the valve body

LIFETIME OF THE PRODUCT
10 years from product manufacturing

DOCUMENTATION
Declaration of Conformity and Instructions for Use

REFERENCE LEGISLATIVE STANDARDS

CE_{0123}	Council Directive 93/42/EEC
Class	IIB
RDM	84047/R DM of the 20th of February 2007
CND	Z120309 DM of the 20th of February 2007

REFERENCE TECHNICAL STANDARDS
UNI EN …

TECHNICAL FEATURES
PERFORMANCES

Gas	Medical Oxygen
Inlet pressure	4 bar
Flow rate	0-15 lit/min with adjustable sphere
Operating temperature	-20° C +50°C

MATERIALS

Body	CW617N-UNI EN 12165 Chrome-plate brass
Opening	Nylon with brass insert

CONNECTION

Inlet	AFNOR/UNI/DIN
Outlet	male 9/16 UNF (1/4" upon req.) with nut and hose connector

DIMENSIONS AND WEIGHT

Dimensions	170 x 100 x 110 mm. (single)
Weight	0,780 kg.

Code	Description	Inlet	Outlet	Flow capacity	Gas
RO.400.12047	FLOW METER 9/16UNF UNI COUPLING	UNI	PG	0/15Lt.min	O2
RO.400.12047DIN	FLOW METER 9/16UNF DIN MOUNT	DIN	PG	0/15Lt.min	O2
RO.400.12049	FLOW METER 9/16UNF AFNOR GRAFT	NF B	PG	0/15Lt.min	O2
RO.400.12190	AFNOR DOUBLE COUPLING FLOW METER	NF B	PG	0/15Lt.min	O2
RO.400.12191	FLOW METER DOUBLE COUPLING UNI	UNI 1H	PG	0/15Lt.min	O2
RO.400.12194	FLOW METER GRAFT AFNOR C/UMIDIF.	NF B	PG	0/15Lt.min	O2
RO.400.12195	FLOW METER GRAFT UNI C/UMIDIF.	UNI 2	PG	0/15Lt.min	O2
RO.400.12197	DOUBLE INN FLOW METER. AFNOR C/UMIDIF	NF B	PG	0/15Lt.min	O2
RO.400.12198	DOUBLE INN FLOW METER. UNI C/UMIDIF	UNI 2	PG	0/15Lt.min	O2
CO.400.12059	HUMIDIFIER 9/16UNF FOR FLOW METER	9/16 UNF	PG	0/15Lt m	O2
CO.400.18016	DISPOSABLE HUMIDIFIER 9/16" MU0002	9/16 F	PG	0/15Lt m	O2

ACCESSORIES

Code	Description	Inlet	outlet	Gas
RO.400.12001	SPLITTER FOR FLOW METER	UNI 2	-	-
RO.400.12001DIN	SPLITTER FOR FLOW METER DIN	UNI 2	-	-
1692	QUICK COUPLING UNI-GC1/4X10	UNI 2	GC 1/4	-
1692	QUICK COUPLING UNI-GC1/4X10	UNI 2	GC 1/4	-
1692C	QUICK COUPLING UNI CON PORTAGOM	UNI	-	-
1692A	QUICK COUPLING UNI-90°PORTAG.	UNI	-	-
CO.100.12067	UNI O2 1/4" SOCKET	UNI 2	G1/4	O2
1692A	QUICK COUPLING UNI-90°PORTAG.	UNI	-	-
CO.100.12068	AIR INTAKE 20X1,5SX	-	G1/5	AIR
1692N2O	QUICK COUPLING UNI-N2O+ PORTAGOMMA	UNI	-	-
CO.100.12069	UNI N2O VGT45M-P/PB SOCKET	UNI	-	N2O
CO.100.12072	UNI CO2 MEDICAL GC1/4" SOCKET	UNI	-	CO2
1694	AFNOR C-PORT STRAIGHT QUICK COUPLING	AFNOR	HC	-
1694C	QUICK COUPLING AFNOR-GC1/4"	AFNOR	HC	-
1694B	QUICK COUPLING AFNOR 1/8'	AFNOR	-	-
1694D	QUICK COUPLING AFNOR- 90°	AFNOR	GC 1/4	-
1694A	QUICK COUPLING AFNOR- 3/8 UNF F.	AFNOR	-	-
1694E	QUICK COUPLING AFNOR O2 9/16 UNF	-	GC 1/8	O2
CO.100.12064	AFNOR O2 1/4" SOCKET	NF B	-	O2
CO.100.12065	1/4" AIR INTAKE	NF B	-	AIR
1694N2O	QUICK COUPLING AFNOR N2O C-PORT DRITTO	AFNOR G	HC	N2O
CO.100.12066	AFNOR N2O 1/4" SOCKET	AFNOR G	-	N2O
CO.100.12070	AFNOR CO2 MEDICAL SOCKET 1/4"	AFNOR C	-	CO2
1690	QUICK COUPLING DIN 1/4 IGTD F1/4-O	DIN	F1/4-	-
1690O2	COUPLINGDIN OSSIGENO CON PORT. 90°	DIN	-	O2
4022	QUICK COUPLING DIN O2 G1/8" PER FLUSS	DIN	-	O2
4021	QUICK COUPLING DIN O2 1/4" NPT	DIN	-	O2
CO.100.12063	OXYGEN SOCKET 13260 PART.2	DIN	-	O2
CO.100.12063AIR	AIR INTAKE	DIN	-	AIR
1690N2O	COUPLINGDIN N2O	DIN	-	N2O
CO.100.12063N2O	1/4" DIN N2O SOCKET	DIN	-	N2O

HUMIDIFIER AND ACCESSORIES FOR OXYGEN THERAPY

STERILIZABILE HUMIDIFIER FOR OXYGEN THERAPY

Series CO.400

Sterilizable humidifier for oxygen therapy. It is a device that allows you to increase the humidity level during oxygen therapy both at home and at hospitals.

TRACEABILITY
Serial number stamped on the valve body

LIFETIME OF THE PRODUCT
10 years from product manufacturing

DOCUMENTATION
Declaration of Conformity and Instructions for Use

REFERENCE LEGISLATIVE STANDARDS

CE_{0123}	Council Directive 93/42/EEC
Class	IIB
RDM	84047/R DM of the 20th of February 2007
CND	Z120309 DM of the 20th of February 2007

REFERENCE TECHNICAL STANDARDS
UNI EN 10524-1

TECHNICAL FEATURES

PERFORMANCE

Operating temperature	2°C – 50°C (+- 10%)

MATERIALS

Body	Sterilizable macron
Fitting	Chromed brass connection

CONNECTIONS

Inlet	9/16 UNF female
Outlet	Adjustable hose connector 6 mm.

DIMENSION AND WEIGHT

Dimension	175 mm x 116 mm
Weight	180 gr.

DISPENSING FLOW 20 lt/min. (max)

OPERATING PRESSURE 5 bar (max)

CAPACITY 250 cc.

Code	Description	Inlet	Outlet	Flow capacity	Gas
CO.400.12059	HUMIDIFIER 9/16UNF FOR FLOW METER	9/16 UNF	HC	0/15Lt m	O2

SINGLE-PATIENT HUMIDIFIER FOR OXYGEN THERAPY Series CO.400.18016

Single-patient bubbler humidifier. Connection to the 9/16” UNF flowmeter. Cup in non-toxic PVC material with a capacity of 350 cc. Equipped with a 6 psi safety valve, it is very simple to connect to the oxygen source thanks to the connection with large fins. Product identification label. Built and marked as intended for medical devices.
Packs of 50 pieces.

Code	Description	Inlet	Outlet	Gas
CO.400.18016	DISPOSABLE HUMIDIFIER 9/16" MU0002	9/16 F	HC	O2

SINGLE-PATIENT HUMIDIFIER FOR OXYGEN THERAPY Series CO.400.18015

Single-patient bubbler humidifier. It has a PVC B cap cup and a medical grade PVC internal extension tube. Polyethylene silencer filter (80µ). Suitable for use when there is no possibility of direct connection with the pressure reducer. Latex-free product, packaged in a heat-sealed bag, has a shelf life of 5 years from the date of manufacture. The products has an identification label. Built and marked as intended for medical devices.
Packs of 200 pieces.

Code	Description	Inlet	Outlet	Gas
CO.400.18015	DISPOSABLE HUMIDIFIER WITH LANYARD	PG	HC	O2

SINGLE-PATIENT HUMIDIFIER KIT FOR OXYGEN THERAPY Series CO.400.18015KIT

This KIT includes a bubbling humidifier and a pair of disposable glasses, Ray Ban style. It has a PVC cap cup and a medical grade PVC internal extension tube. Polyethylene silencer filter (80µ). Suitable for use when there is no possibility of direct connection with the pressure reducer. Latex-free product, packaged in a heat-sealed bag, has a shelf life of 5 years from the date of manufacture. Product identification label. Built and marked as intended for medical devices.
Packs of 150 pieces.

Code	Description	Inlet	Outlet	Gas
CO.400.18015KIT	DISPOSABLE HUMIDIFIER KIT WITH CANULE	PG	HC	O2

SINGLE-PATIENT MASKS FOR OXYGEN THERAPY Series CO.400.18021

Masks for Oxygen Therapy.
The anti-crush hose prevents interruptions in the oxygen flow.
The products are disposable and packaged in a single bag containing the product data and production date (pediatric version on request).
Expiration of 3 years from the production date is shown on the packaging. The product is compliant with Directive 93/42/EEC (Legislative Decree 46/97), Class IIA device. Packs of 50 pieces.

Code	Description	Inlet
CO.400.18021	OXYGEN THERAPY MASK WITH TUBE	PG
CO.400.18021A	MASK FOR OSSIG. NEONATAL WITH TUBE	PG
CO.400.18021B	PEDIATRIC OXYGEN MASK W/TUBE	PG

SINGLE-PATIENT MASKS FOR OXYGEN THERAPY

Series CO.400.18018

Disposable mask for variable concentration oxygen therapy with 15 cm corrugated tube.
Anti-crush extension tube lg. 2000 and F/F universal connection.
Cup and adapters for varying the oxygen concentration (Blue 24% - Yellow 28% - White 31% - Green 40% - Orange 50%).
Medical grade PVC mask and tube, latex-free product. External diameter of the anti-crushing tube: 6.0 mm.
Packaged in a single heat-sealed bag (pediatric version on request).
Expiry: 3 years from the production date shown on the packaging.
Compliant with Directive 93/42/EEC (Legislative Decree 46/97). Class IIA device. Packs of 50 pieces.

Code	Description	Inlet
CO.400.18018	VENTURI KIT MASK	PG
CO.400.18018A	VENTURI MASK PEDIATRIC KIT	PG

Aerosol therapy mask with lg. 2000 anti-crushing tube ampoule with universal F/F connection.
Medical grade PVC mask and tube, latex-free products. Tube external diameter: 6.0 mm.
Packaged in a single heat-sealed bag (Pediatric version CO.400.18018A on request).
Expiry: 3 years from the production date shown on the packaging.
Complies with Directive 93/42/EEC (Legislative Decree 46/97). Class IIA device. Packs of 50 pieces

Code	Description
CO.400.18023	OXYGEN THERAPY MASK C-BALLOON
CO.400.18011	SILICONE HALF MASK C/VALV. ON DEMAND

SINGLE-PATIENT NASAL CANNULA FOR OXYGEN THERAPY

Series CO.400.18020

Nasal cannulas for oxygen therapy.
The anti-crush hose prevents interruptions in the oxygen flow.
The products are disposable and packaged in a single heat-sealed bag reporting the product data and production date.
Expiry: 5 years from the production date shown on the packaging. Complies with Directive 93/42/EEC (Legislative Decree 46/97). Class IIA device. Packs of 50 pieces.

Codice	Descrizione
CO.400.18020	CANNULA NASALE OS/12A

MEDICAL GAS VALVE MOD. FUTURA

Series VI.200

FUTURA valve is for high pressure medical gas cylinders.

REFERENCE LEGISLATIVE STANDARDS

TT_{1370}	Directive 2010/35/EU

REFERENCE TECNICAL STANDARDS

UNI-EN-ISO 10297

PERFORMANCE

Gas	O2/Air/N2O/CO2
Inlet pressure	230 Bar
Operating temperature	-45° C +65°C

MATERIALS

Body	Chromed brass CW617N-UNI EN 12165
Shutter	Peek with brass pit
Hole seat	5,2 mm.
O-ring	EPDM
Valve knob	Grey painted aluminum

CONNECTIONS

Inlet	25 E
Outlet	UNI - NF - DIN - BS - CGA
Filling connection	UNI 11144/2 (Med. oxygen) UNI 11144/6 (Med. air) UNI 11144/10 (Med. Carbon Dioxide)
Dip tube connection	M10x1

DIMENSIONS AND WEIGHT

Dimension	120 x 60 x 52 mm
Weight	0,65Kg

SAFETY DEVICES

Overpressure valve (CO2-N2O)

DOCUMENTATION

Declaration of Conformity and Instructions for Use

CODE	DESCRIPTION	INLET	OUTLET	GAS
VI.236.20538UNI	Val. FUTURA 25E CO2 UNI 11144/2 W/D 250	25E	UNI/2	CO2
VI.236.20540UNI	Val. FUTURA 25E CO2 UNI 11144/2 CROM	25E	UNI/2	CO2
VI.236.20520	Val. FUTURA 25E O2 UNI 11144/2	25E	UNI 2	O2
VI.236.20544UNI	Val. FUTURA 25E N2O UNI 11144/9 CROM	25E	UNI 1144/9	N2O
VI.244.20402	Val. FUTURA 25E UNI 11144/6 Aria crm	25E	UNI 1144/6	ARIA
VI.244.20404NF	Val. FUTURA 25E O2 NF E29-656 CROM.	25E	NF E29-656 /B	O2
VI.244.20568ISO	Val. FUTURA 25E CO2 ISO5145 MED CROM.	25E	ISO5145	CO2 MED
VI.244.20534DIN	Val. FUTURA 25E O2 DIN477/9 200bar	25E	DIN 9	O2

MEDICAL GASES RESIDUAL VALVE MOD. FUTURA

Series VI.400

Residual valves mod. FUTURA in chromed brass for high pressure cylinders. This valve is equipped with a positive pressure residual system, with the specific function of preventing the penetration of all molecules foreign to the gas found in the cylinder, leaving a residual gas of approximately 3 bar.

Adapter for FUTURA Valve

High pressure brass body with stainless steel tip. Connection according to UNI/NF/BS/DIN standards.

REFERENCE LEGISLATIVE STANDARDS

TT_{1370} Directive 2010/35/EU

REFERENCE TECHNICAL STANDARDS

UNI-EN-ISO 10297;

PERFORMANCE

Gas	O2/Air/N2O/CO2
Inlet pressure	230 Bar
Operating temperature	-45° C +65°C
Residual pressure	2,5/4bar

MATERIALS

Body	Chromed brass CW617N-UNI EN 12165
Shutter	Peek with brass ferrule
Hole seat	5,2 mm.
O-ring	EPDM
Valve knob	Grey painted alluminium

CONNECTION

Inlet	25 E – 17E
Outlet	UNI - NF - DIN - BS - CGA
Filling connection	UNI 11144/2 (Med. oxygen) UNI 11144/6 (Med. air) UNI 11144/10 (Med. Carbon dioxide)
Dip tube connection	M10x1

DIMENSIONS AND WEIGHT

Dimension	120 x 60 x 52 mm
Weight	0,75Kg

ACCESSORY DEVICES

Charging adapter

SAFETY DEVICES

Overpressure valve (CO2-N2O)

DOCUMENTATION

Declaration of Conformity and instructions for use.

Code	Description	Inlet	Outlet	Gas
VI.448.20611UNI	Val. FUTURA 25E O2 UNI 11144/2 RES.	25E	UNI/2	O2
VI.448.20615UNI	Val. FUTURA 17E O2 UNI 11144/2 RES.	17E	UNI/2	O2
VI.448.20617UNI	Val. FUTURA 25E ARIA UNI 11144 RES.	25E	UNI/6	AIR
VI.448.20618UNI	Val. FUTURA 25E CO2 UNI 11144 MED. Res.	25E	UNI/10	CO2
VI.448.20619UNI	Val. FUTURA 17E CO2 UNI 11144 MED RES.	17E	UNI/10	CO2 med
VI.448.20620UNI	Val. FUTURA 17E N2O UNI 11144 RES.	17E	UNI/9	N2O
CO.100.10638	ADAPTER FOR FUTURA RES N2	UNI 5	-	N2
CO.100.10639	ADAPTER FOR FUTURA RES O2-CO2 UNI	UNI 2	-	O2 CO2
CO.100.10640	ADAPTER FOR FUTURA RES Ar-He	UNI 8	-	Ar-He

PIN INDEX MEDICAL GAS VALVES

Series CO.500

High pressure Pin Index valve for medical gas cylinders. These devices are equipped with special connection holes to which is applied the appropriate bracket depending on the gas that will be used.

SATEFY DEVICES
Overpressure valve (CO2-N2O)

DOCUMENTATION
Declaration of Conformity and Instructions for Use.

REFERENCE LEGISLATIVE STANDARDS

TT_{0062}	Directive

TECHNICAL STANDARDS OF REFERENCE
UNI-EN-ISO 10297;

PERFORMANCE

Gas	O^2/Air/N^2O/CO^2
Inlet pressure	230 Bar
Operating temperature	-45° C +65°C

MATERIALS

Body	Cromed brass CW617N-UNI EN 12165
Shutter	Peek with brass ferrule
Hole seat	2,4 mm.
O-ring	EPDM
Valve knob	Black Nylon

CONNECTIONS

Inlet	17E-25 E
Outlet	UNI/CGA
Filling connection	
Dip tube connection	M6

DIMENSIONS AND WEIGHT

Dimension	120 x 60 x 52 mm
Weight	0,65Kg

Code	Description	Inlet	Outlet	Gas
VI.524.10803	Val. PIN INDEX 17E N2O	17E	Pin index	N2O
VI.524.10804	Val. PIN INDEX 17E O2	17E	Pin index	O2
VI.524.10806	Val. PIN INDEX 17E AIR	17E	Pin index	AIR
VI.528.10805	Val. PIN INDEX 17E CO2	17E	Pin index	CO2
VI.528.10807	Val. PIN INDEX 17E Ar-He	17E	Pin index	Ar-He
VI.528.10824	Val. PIN INDEX 0.715 O2 BS341	0,715	Pin index	O2
VI.528.10831	Val. PIN INDEX 25E N2O	25E	Pin index	N2O
VI.528.10832	Val. PIN INDEX 25E O2	25E	Pin index	O2
VI.528.10833	Val. PIN INDEX 25E AIR	25E	Pin index	AIR
VI.528.10835	Val. PIN INDEX 25E CO2	25E	Pin index	CO2
VI.528.10837	Val. PIN INDEX 25E NITROGEN	25E	Pin index	N2
CO.503.10834	PIN INDEX ISO 407 N2 G ¼ CROMED	G ¼	ISO 407	N2
CO.503.10835	PIN INDEX ISO 407 N2O G ¼ CROMED	G ¼	ISO 407	N2O
CO.503.10836	PIN INDEX ISO 407 O2 G ¼ CROMED	G ¼	ISO 407	O2
CO.503.10836A	PIN INDEX ISO 407 O2 21,7 CROMED	21,70	ISO 407	O2
CO.503.10836B	PIN INDEX ISO 407 O2 3/4G CROMED	3/4G	ISO 407	O2
CO.503.10837	PIN INDEX ISO 407 CO2 G ¼ CROMED	G ¼	ISO 407	CO2
CO.503.10838	PIN INDEX ISO 407 ARIA G ¼ CROMED	G ¼	ISO 407	AIR
CO.503.10838BS	PIN INDEX BRACKET AIR BS G5/8	Pin Index	G5/8	AIR
CO.503.10839	PIN INDEX ISO 407 AR-HE G ¼ CROMED	G ¼	ISO 407	AR-HE
CO.503.10839A	PIN INDEX BRACKET Ar-He- 21,8	Pin Index	21,80	Ar-He

EURO 2000 VALVES FOR MEDICAL GAS CYLINDERS

Series VI.123

Euro 2000 valve in chromed brass for medical gas cylinders with 17 E connection. This compact device is suitable for application on small cylinders.

REFERENCE LEGISLATIVE STANDARDS

TT_{0062}	Directive

REFERENCE TECHNICAL STANDARDS

UNI-EN-ISO 10297;

PERFORMANCE

Gas	O^2/Air/N^2O/CO^2
Inlet pressure	230 Bar
Operating temperature	-45° C +65°C

MATERIALS

Body	Chromed brass CW617N-UNI EN 12165
Shutter	Peek with brass ferrule
Hole seat	2,4 mm.
O-ring	EPDM
Valve knob	Nylon

CONNECTIONS

Inlet	17 E
Outlet	UNI - NF - DIN - BS - CGA
Filling connection	UNI 11144/2 (Med. oxygen) UNI 11144/6 (Med. air) UNI 11144/10 (Med. Carbon dioxide)
Dip tube connection	M10x1

DIMENSIONS AND WEIGHT

Dimension	95 x 45 x 40 mm
Weight	0,645Kg

SAFETY DEVICES

Overpressure valve (CO2-N2O)

DOCUMENTATION

Declaration of Conformity and Instructions for Use.

Code	Description	Inlet	Outlet	Gas
VI.123.10748	Val. E2000 17E AIR W30x14 UNI	17E	UNI/6	AIR
VI.123.10752	Val. E2000 17E CO2 MEDICAL UNI	17E	UNI/10	CO2
VI.126.10861	Val. E2000 RID. 17E O2 UNI	17E	UNI/2	O2
VI.126.10864	Val. E2000 RID. 17E N2O UNI C/DISP.	17E	UNI /11149	N2O
VI.123.10754	Val. E2000 17E O2 NF	17E	NF E 29-650B	O2

VALVES FOR PANELS AND SPECIAL APPLICATIONS

VI.322.20702

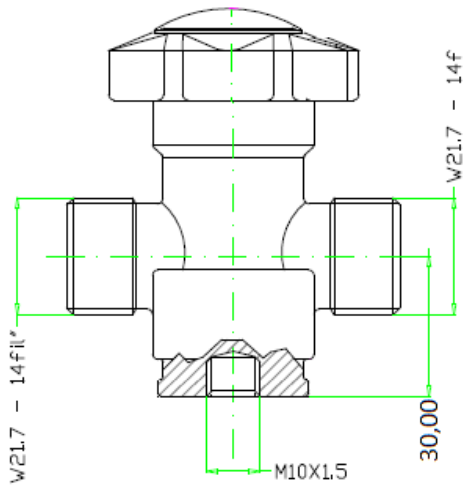

REFERENCE LEGISLATIVE STANDARDS

TT_{1370}	Directive 2010/35/EU

STANDARD TECHNICAL STANDARDS

UNI-EN-ISO 10297;

PERFORMANCE

Gas	N2
Inlet pressure	230 Bar
Operating temperature	-45° C +65°C

MATERIALS

Body	Chromed brass CW617N-UNI EN 12165
Shutter	Peek with brass ferrule
Hole seat	M10c1,5 mm.
O-ring	EPDM
Valve knob	Grey painted aluminum

CONNECTIONS

Inlet	UNI 5
Outlet	UNI -5

DIMENSIONS AND WEIGHT

Dimension	120 x 60 x 52 mm
Weight	0,65Kg

SAFETY DEVICES

Overpressure valve (CO2-N2O)

DOCUMENTATION

Declaration of Conformity and instructions for use. SDC

VI.322.20702STM

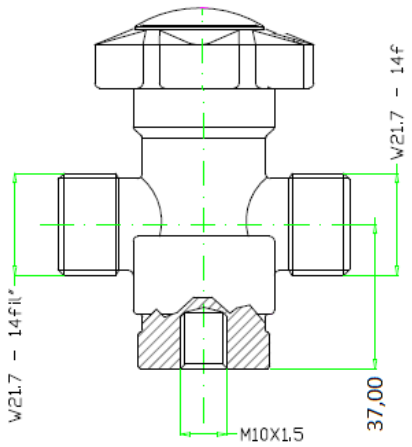

Code	Description	Inlet	Outlet	Gas
VI.322.20702	Val. FUTURA M10x1.5 21.7x14+21.7x14 QUAD	UNI 2	UNI 1144/2	O2
VI.322.20702C	Val. FUTURA M10x1.5 24.32-24.32 DIN10AZO	UNI 2	DIN10	N2

STEEL PROTECTIVE CAP FOR VALVES

Series DCAPP

REFERENCE TECHNICAL STANDARDS

EN ISO 11117

TECHNICAL FEATURES

MATERIALS

Body	Galvanized steel

CONNECTIONS

To the cylinder	Via mounting key

ADAPTABILITY

To all cylinders with a capacity of 5 -50 liters

DIFFERENT VERSIONS

Tulip cap, galvanized steel open on both sides.

Closed cap, grey painted steel.

Black tulip cap. Galvanized steel open on one side.

Other colors and brands customizable on request.

SAFETY

Fall test	EN ISO 11117

ACCESSORY DEVICE

Mounting key

Steel protective cap for valves to be applied to cylinders from 5 to 50 liters.

Key for mounting the protection.

Code	Description
CO.100.18100	FULL ROUND IRON CAP
CO.100.18103	TULIP CAP ACC. ZINC. AP.2LA
CO.100.18104	TULIP CAP C/VITE ACC. ZINC. AP.2LA

ABS TULIP CAP FOR CYLINDERS

Series DCAPP

ABS cap in accordance with EN ISO 11117 for all cylinders with a 0,5-14lt capacity.

REFERENCE TECHNICAL STANDARDS

EN ISO 11117

TECHNICAL FEATURES

MATERIALS

Body ABS

CONNECTIONS

To the cylinders through thread

ADAPTABILTY

To all cylinders with a 0,5-14lt capacity

VERSIONS

Black version (series)

Coloured version (white, blue, light blue, yellow, red)

SAFETY

Fall test EN ISO 11117

ACCESSORY DEVICES

Lock ring nut for caps

CODE	DESCRIPTION
CO.100.18105	BLACK TULIP PLASTIC CAP
CO.100.18106	WHITE TULIP PLASTIC CAP
CO.100.18107	BLUE TULIP PLASTIC CAP
CO.100.18108	ORANGE TULIP PLASTIC CAP
CO.100.18109	LIGHT BLUE TULIP PLASTIC CAP
CO.100.18110	CHALICE COVER in RED ABS
2107A	CYLINDER RING NUT Ø TO SIZE FOR COP. TULIP
\2107	CYLINDER RING NUT Ø 24 FOR COP. TULIP

TECHNICAL GAS FLEXIBLE HOSE

Series DFL

These hoses are specifically made for the high pressure compressed gas sector.
The shape of the connecting pipes requires the use of brass fittings specific for the use.

TECHNICAL FEATURES

PERFORMANCE

Gas high pressure compressed gas
Operating temperature -60° C +260°C
Minimum curve radio 35
Max working pressure 400 bar
Minimum burst pressure 1600 bar
Internal diameter 6,5 mm
External diameter 12,5 mm
Safety factor more than 1:4 (working pressure/burst pressure)

MATERIALS

Underlayer Smooth PTFE extruded and sintered without high thickness joints.
Cover High resistance treated AISI 304 stainless steel braid.
Reinforcement Kevlar braided cord
Hemming Hoses for oxygen use with 1/4"g. nut AISI304, brass ogive
Hoses for different gases with 1/4"g. nut AISI304 ogive

CONNECTIONS

Inlet 1/4" G. F. Dx
Outlet 1/4" G. F. Dx

DIMENSIONS

Dimensions:

- 500 mm (without safety cord)
- 1000/1500/2000 mm (with safety cord)

ACCESSORY DEVICES

Specific brass fitting for hoses

SAFETY DEVICES

Integrated anti-swing safety cord
Use for emptying containers is prohibited for oxygen use.

Code	Description	Inlet	Outlet	Gas
DFLGV0105	FLEXIBLE LG.500 X VARIOUS GAS	1/4" G. F. Dx	1/4" G. F. Dx	-
DFLGV0110	FLEXIBLE LG.1000 X VARIOUS GASES	1/4" G. F. Dx	1/4" G. F. Dx	-
DFLGV0115	FLEXIBLE LG.1500 X VARIOUS GAS	1/4" G. F. Dx	1/4" G. F. Dx	-
DFLGV0120	FLEXIBLE LG.2000 X VARIOUS GASES	1/4" G. F. Dx	1/4" G. F. Dx	-
DFLO20005	FLEXIBLE 1/4" LG.500 X O2	1/4" G. F. Dx	1/4" G. F. Dx	O2
DFLO20010	FLEXIBLE 1/4" LG.1000 X O2 WITH SAFETY CABLE	1/4" G. F. Dx	1/4" G. F. Dx	O2
DFLO20015	FLEXIBLE 1/4" LG.1500 X O2 WITH SAFETY CABLE	1/4" G. F. Dx	1/4" G. F. Dx	O2
DFLO20020	FLEXIBLE 1/4" LG.2000 X O2 WITH SAFETY CABLE	1/4" G. F. Dx	1/4" G. F. Dx	O2

CHROME FITTINGS FOR TECHNICAL GAS

Series DCODOLO

TECHNICAL FEATURES

MATERIALS

Body Brass 58

CONNECTIONS

Shank 1/4" G. M

Hex nut UNI 11144/2 Oxygen
UNI 11144/5 Nitrogen
UNI 11144/8 Argon
UNI 11144/6 Aria
UNI 11144/1H Hydrogen

Fittings in chromed brass for gas

DIMENSIONS

Length

- 45/60/45 mm (shank)
- 22/27/28/22 mm (nut)

ACCESSORY DEVICES

Gaskets

Codice	Descrizione	Ingresso	uscita	Gas
9324CR	SET CODOLO UNI 2 O2 CO2 G ¼ MEDIO CROMATO	G ¼	UNI 2	O2 CO2
9327CR	SET CODOLO UNI 5 N2 G ¼ D MEDIO CROMATO	G ¼	UNI 5	N2
9328CR	SET CODOLO UNI 8 AR-HE G ¼ D MEDIO CROMATO	G ¼	UNI 8	AR-HE
9329CR	SET CODOLO UNI 1H H2 G ¼ D CROMATO	G ¼	UNI 1H	H2
9330CR	SET CODOLO UNI 6 ARIA G ¼ CROMATO	G ¼	UNI 6	ARIA
9336	SET CODOLO UNI 10 CO2 MED G ¼ CROMATO	G ¼	UNI 10	CO2 MED
9332	SET CODOLO DIN 477 NR 9 O2 G ¼ D	G ¼	DIN 9	O2
CO.503.10834	PIN INDEX ISO 407 N2 G ¼ CROMATO	G ¼	ISO 407	N2
CO.503.10835	PIN INDEX ISO 407 N2O G ¼ CROMATO	G ¼	ISO 407	N2O
CO.503.10836	PIN INDEX ISO 407 O2 G ¼ CROMATO	G ¼	ISO 407	O2
CO.503.10836A	PIN INDEX ISO 407 O2 21,7 CROMATO	21,70	ISO 407	O2
CO.503.10836B	PIN INDEX ISO 407 O2 3/4G CROMATO	3/4G	ISO 407	O2
CO.503.10837	PIN INDEX ISO 407 CO2 G ¼ CROMATO	G ¼	ISO 407	CO2
CO.503.10838	PIN INDEX ISO 407 ARIA G ¼ CROMATO	G ¼	ISO 407	ARIA
CO.503.10839	PIN INDEX ISO 407 AR-HE G ¼ CROMATO	G ¼	ISO 407	AR-HE

FITTINGS FOR TECHNICAL GAS

Series DCODOLO

Brass gas fittings

TECHNICAL FEATURES

MATERIALS

Body — Brass 58

CONNECTIONS

Shank — 1/4" G. M

Hex nut
- UNI 11144/2 Oxygen
- UNI 11144/5 Nitrogen
- UNI 11144/8 Argon
- UNI 11144/6 Air
- UNI 11144/1H Hydrogen
- UNI11144/7S Acetylene braket
- NF E 29-658 French acetylene

DIMENSIONS

Length

- 45/60/45 mm (shank)
- 22/27/28/22 mm (nut)

ACCESSORY DEVICES

Gaskets

Degreasing treatment for all fittings

Code	Description	Inlet	outlet	Gas
9322	SHANK SET NF E 29-650 A H C2H2 G ¼ D LONG	G ¼	NF A H	C2H2
9323	SHANK SET NF E 29-650 B O2 G ¼ D LONG	G ¼	NF B	O2
9324	SHANK SET UNI 11144 GR II O2 CO2 G ¼ D LONG	G ¼	UNI 2	O2 CO2
9327	SHANK SET UNI 11144 GR V N2 G ¼ D LONG	G ¼	UNI 5	N2
9328	SHANK SET UNI 11144 GR VIII AR-HE G ¼ D LONG	G ¼	UNI 8	AR-HE
9329	SHANK SET UNI 11144 GR I H2 G ¼ D	G ¼	UNI 1H	H2
9330	SHANK SET UNI 11144 GR VI AIR G ¼ D MEDIUM	G ¼	UNI 6	ARIA
9322M	SHANK SET NF E 29-650 A H C2H2 G ¼ D LONG	G ¼	NF AH	C2H2
9323M	SHANK SET NF E 29-650 B O2 G ¼	G ¼	NF B	O2
9324M	SHANK SET UNI 11144 GR II O2 CO2 G ¼ MG LONG	G ¼	UNI 2	O2 CO2
9327M	SHANK SET UNI 11144 GR V N2 G ¼ M LONG	G ¼	UNI 5	N2
9328M	SHANK SET UNI 11144 GR VIII AR-HE G ¼ LONG	G ¼	UNI 8	AR-HE
9329M	SHANK SET UNI 11144 GR I H2 G ¼	G ¼	UNI 1H	H2
9330M	SHANK SET UNI 11144 GR VI AIR G ¼ M LONG	G ¼	UNI 6	ARIA
9341M	SHANK SET UNI 11144 GR IX N20 G ¼ M MEDIUM	G ¼	UNI 9	N20
9345M	SHANK SET UNI 11144 GR I GPL G ¼ M MEDIUM	G ¼	UNI 1H	GPL
9346M	SHANK SET UNI 11144 GR I H2 G ¼	G ¼	UNI 1H	H2
9328	SHANK SET UNI 11144 GR VIII AR-HE G ¼ D LONG	G ¼	UNI 8	AR-HE
9329	SHANK SET UNI 11144 GR I H2 G ¼ D	G ¼	UNI 1H	H2
9330	SHANK SET UNI 11144 GR VI ARIA G ¼ D MEDIUM	G ¼	UNI 6	ARIA

TROLLEY FOR CYLINDERS

Code	Description
CO.100.18052	TROLLEY FOR CYLINDER L.5/7
CO.100.18053	TROLLEY FOR CYLINDER L.10/14
CO.100.18055	TROLLEY FOR CYLINDER L.14
CO.100.18059	TROLLEY FOR CYLINDER L.27

O-RINGS

Code	Description	Ø inside	Thickness
OR000E	O-RING 000 EPDM 1.42X1.52	1,42	1,5
OR000N	O-RING 000 NITRILE 1.42X1.52	1,42	2
OR000V	O-RING 000 VITON 1,42X1,52 GREEN	1,42	2
OR101E	O-RING OR101 EPDM	2,90	2
OR101V	O-RING OR101 VITON	2,90	1,8
OR103E	O-RING OR103 EPDM	4,48	1,8
OR103N	O-RING OR103 NITRILE	4,48	1,8
OR103V	O-RING OR103 VITON	4,48	1,8
OR104E	O-RING OR104 EPDM	5,28	2
OR104EPDM	O-RING OR104 EPDM	5,28	2
OR104N	O-RING OR104 NITRILE	5,28	2
OR104V	O-RING OR104 VITON	5,28	2
OR105E	O-RING OR105 EPDM	6,07	2
OR105ET	O-RING OR105 ETHYLENE PROPYLENE	6,07	2
OR105N	O-RING OR105 NITRILE	6,07	2
OR105N90	O-RING OR105 NITRILE 90 SHORE	6,07	2
OR105V	O-RING OR105 VITON 90 SH GREEN	6,07	2
OR106E	O-RING OR106 EPDM	6,75	2
OR106N	O-RING OR106 NITRILE	6,75	2
OR106V	O-RING OR106 VITON BLACK	6,75	2
OR107E	O-RING OR107 EPDM	7,65	2
OR107N	O-RING OR107 NITRILE 90 SH	7,65	2
OR107V	O-RING OR107 VITON	7,65	2
OR108E	O-RING OR108 ETHYLENE-PROPYLENE	8,73	2
OR108N	O-RING OR108 NITRILE 90 SH	8,73	2
OR108V	O-RING OR108 VITON	8,73	2
OR110E	O-RING OR110 EPDM	9,25	2
OR110N	O-RING OR110 NITRILE 90 SH	9,25	2
OR110V	O-RING OR110 VITON	9,25	2
OR113E	O-RING OR113 ETHYLENE PROPYLENE	10,77	3
OR113N	O-RING OR113 NITRILE	10,77	3
OR113V	O-RING OR113 VITON	10,77	3
OR113VRIC	O-RING OR113 VITON CHARGING	10,77	3
OR116E	O-RING OR116 EPDM 80 SH	12,37	3
OR116N	O-RING OR116 NITRILE	12,37	3
OR116N90	O-RING OR116 NITRILE 90 SHORE	12,37	3
OR116V	O-RING OR116 VITON	12,37	3
OR122N	O-RING OR122 NITRILE 3068	17,13	3
OR123N	O-RING OR123 NITRILE 90 SH	17,86	3
OR123V	O-RING OR123 VITON	17,86	3
OR25X4N	OR 25X4 NITRILE	25,00	4
OR3131V	OR3131 VITON 2.62X32.99X38.23	32,99	3

ORAN19E	O-RING AN19 EPDM 4100 90 SH	24,99	4
ORAN19N	O-RING AN19 NITRILE 4100 90 SH	24,99	3,5
ORAN19V	O-RING AN19 VITON 4100 90 SH	24,99	4
ORAN20N	O-RING AN20 NITRILE (4106)	26,57	4
ORMS14E	O-RING MS14 EPDM 2050 90 SH.	12,42	2
ORMS14N	O-RING MS14 NITRILE 2050 90 SHORE	12,42	1,8
ORMS14V	O-RING MS14 VITON 2050 90 SH.	12,42	1,8
ORMS15N	O-RING MS15 NITRILE 2056 90 SH	14,00	1,8
ORMS15V	O-RING MS15 VITON 2056	14,00	1,8
ORMS17E	O-RING MS17 NEPDM 2068	17,70	2
ORMS17N	O-RING MS17 NITRILE 2068	17,70	2
ORMS18N	O-RING MS18 NITRILE 2075	18,77	2
ORMS19E	O-RING MS19 EPDM 2081	20,35	2
ORMS19N	O-RING MS19 NITRILE 2081	20,35	2
ORMS22	O-RING MS22 NITRILE 2100	25,12	2

*Np = net price

GENERAL TERMS AND CONDITIONS OF SALE

1.0 Contracts:

1.1 Each sales contract is always intended to be stipulated and finalised at the headquarters of the Seller, regardless of the place where the commission is given. All the following conditions, none excluded or excepted, are considered implicitly accepted with the placing of the order, even if the customer's order forms contain clauses different from those reported here.

1.2 The minimum order amount must be € 150,00.

2.0 Delivery:

2.1 The delivery terms indicated in the order are indicative and not binding; will be respected subject to the availability of the materials necessary for production and anything else relating to it. Any and all changes made by the customer to the delivery terms after the order are not valid.

2.2 Delays due to fires, strikes, delays in receiving goods, export and import constraints or other causes of force majeure, authorize the Seller to move the delivery terms, relieving it of any liability. Even in the event of such delays, the buyer always has the obligation to proceed with the total withdrawal of the quantity of goods ordered and committed.

2.3 In no case and for no reason is the selling company required to pay compensation of any kind for any direct or indirect damage due to delivery delays and this is because the terms indicated and accepted at the time of placing the order are not binding.

2.4 If the shipment or delivery takes place after the deadline established by order of the customer, the costs of storing the goods in the warehouse will be due to the seller, calculated at the rate of 1.5% of the goods invoice amount for each month of stock.

3.0 Shipping and returns:

3.1 The goods are intended to be supplied ex warehouse of departure unless otherwise agreed. They always travel on behalf and at the risk of the customer even in the case of agreed home delivery. The supply will be considered as having taken place with the delivery of the goods to the carrier indicated by the customer or, in the absence of timely notification, chosen by the Seller. All goods will be shipped by the Seller without insurance; if it is requested, any resulting costs will be borne by the customer.

3.2 Complaints relating to the state of the packaging, quantity or number of pieces must be declared on the delivery note and countersigned by the carrier, the company must be informed, via email, within seven days of receipt of the goods under penalty of forfeiture of any possible right of refund or replacement.

3.3 Returns of goods are not permitted unless after a specific agreement with th Seller. Any returned goods always travel at the exclusive risk of the customer and will only be accepted carriage paid.

3.4 Complaints or any other dispute that may arise as a consequence of the purchase-sale relationships regulated by these conditions do not give the customer the right to suspend or delay payments.

4.0 Prices

4.1 List prices may be varied or changed without any obligation to give prior notice to the client. Prices and all other conditions relating to an order are not binding for any subsequent orders of the same items. Any different agreements do not constitute a derogation from this principle and must be considered limited to the particular case. The prices indicated on the order or in any case agreed upon refer to goods delivered ex-warehouse and shall be borne by the purchaser, in addition to transport costs, packaging, duties, customs tariffs, insurance, special duties, taxes of any kind and in general all tax and ancillary charges of the contract. The prices are subject to revision in the event of changes in the exchange rate.

5.0 Terms of Payment

5.1 Payments shall be made under the conditions set forth in the order exclusively to the cash office of the Seller, the transmission of the sums being at the Purchaser's risk. The possible issuing of drafts constitutes a unilateral initiative of the Seller for a more convenient form of payment and does not imply any shift of territorial jurisdiction. Any discounts granted refer only to the amounts of the goods. No discounts or rebates not agreed upon and/or forfeited shall be recognised.

5.2 In the event of delayed payment, the annual interest shall automatically be charged on the basis of the official discount rate plus 4 percentage points from the due date, without any need for a formal notice. This is without prejudice to the right of the manufacturer, in the event of payment arrears, to suspend any ongoing supply.

6.0 Warranty

6.1 The products are tested before shipment, are guaranteed in accordance with the technical documentation supplied and are provided with the identification tag, affixed by the manufacturer which cannot be removed under any circumstances.

6.2 The warranty is twelve months from the date of collection of the products from the Seller and is limited to the replacement, ex Seller's warehouse, of those parts whose defects will be ascertained.

6.3 Parts that are normally subject to wear and tear are excluded from the guarantee and the guarantee in any case lapses if there has been use that does not comply with the indications in the catalogues or instruction sheets, contamination with improper materials, poor installation or maintenance, or mechanical breakage, modification or tampering.

6.4 The terms for the return of materials acknowledged to be defective and/or in need of repair shall be agreed with the purchaser; however, they shall be understood as identifying the same as the delivery terms.

6.5 In the event of a partial or total recall of a potentially defective batch, the costs associated with tracing the product are excluded from the reimbursement, and remain the responsibility of the purchaser.

6.6 If the purchaser's complaint is acknowledged to be justified, the seller is entitled to repair or replace the parts found to be defective.

6.7 Interventions for replacement under warranty shall be carried out ex vendor's warehouse and deliveries shall be agreed in advance with the same.

6.8 Replacement of goods is not permitted unless specifically agreed with the Seller.

6.9 Compensation for any damage to the purchaser shall not exceed the invoice price of the disputed products.

6.10 This guarantee excludes all other possible liability of the Seller in connection with the delivered products.

6.11 In particular, the purchaser may not make any other claims for damages, price reductions, termination of the contract or suspension of payments.

6.12 If payments are suspended, the guarantee shall be automatically suspended until payments are regularised.

6.13 Under no circumstances shall the Seller be liable for indirect or consequential damage.

7.0 Disputes

7.1 The place of jurisdiction for any dispute shall be Milan

"Pursuant to articles 1341, 1342 and s.s. of the Italian Civil Code, the following clauses are specifically approved: Deliveries 2.3, Shipment and returns 3.1 - 3.4 - Payment conditions 5.2 - Guarantees 6.2 - Disputes 7.1"

SAN-O-SUB MBB IS A MECHANICAL COMPANY WITH PRODUCTION HEADQUARTERS IN ITALY, FOUNDED IN MILAN IN 1934 FOR THE PRODUCTION OF INDUSTRIAL REDUCERS, VALVES AND MEDICAL PRODUCTS.

Info: +39 02 4452075
Sales: +39 02 4454057

Via Leonardo da Vinci. 168 -
20090 Trezzano sul Naviglio (Milano)

Info: sanosub@sanosub.com